AMERICAN Flow Control Submittal Information

60" - 66" SERIES 2500 RESILIENT WEDGE GATE VALVE
NRS CLASS 125 FLANGED ENDS WITH SPUR GEAR ACTUATOR (FLG X FLG)

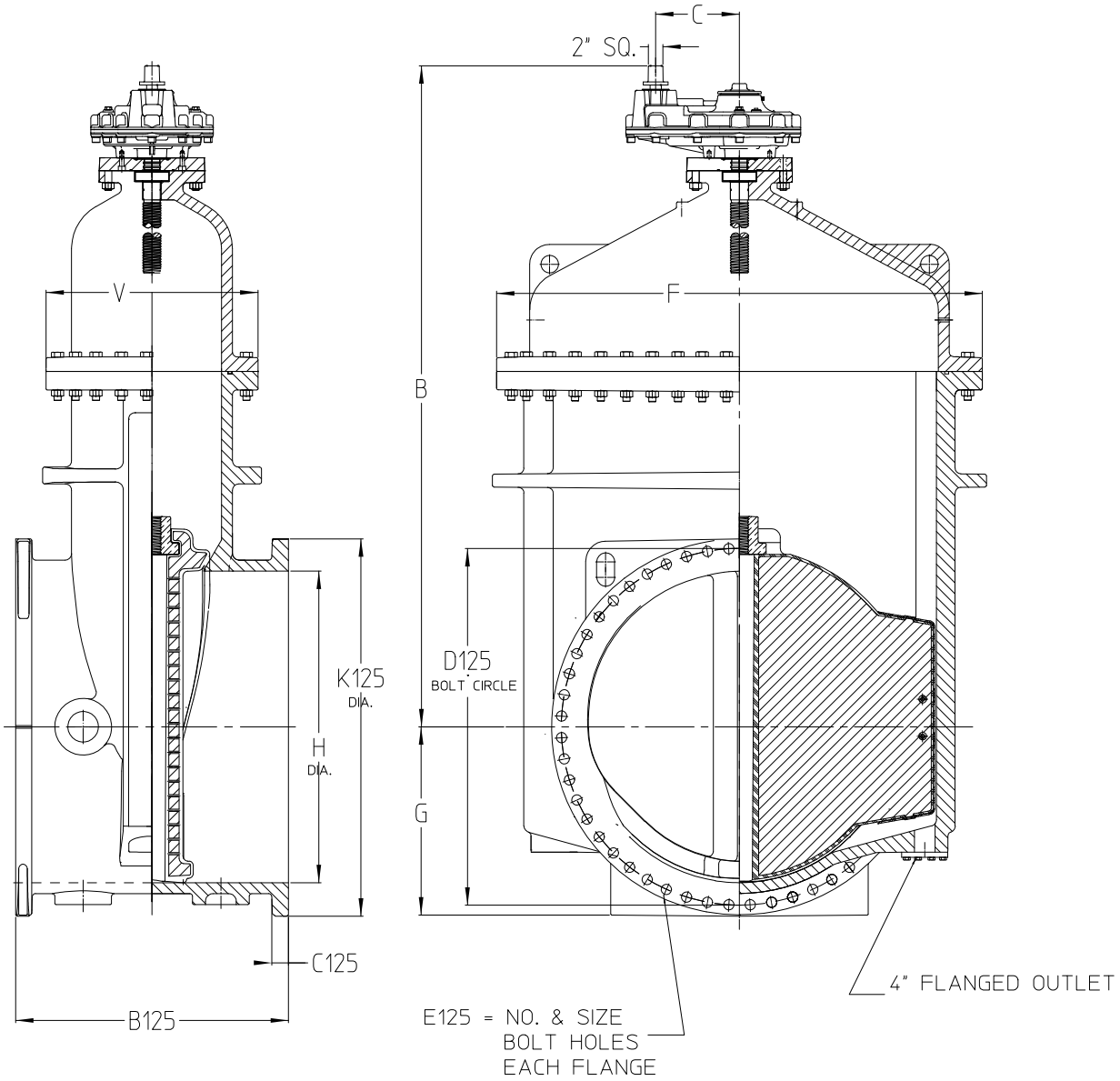

91-21432

Size	60"	66"
B	122.19	122.19
B125	53.00	58.00
C	15.67	15.67
C125	3.13	3.38
D125	69.25	76.00
E125	52 - 2.00	52 - 2.00
F	94.38	94.38
G	36.75	40.25
H	60.50	60.50
K125	73.00	80.00
V	41.81	41.81
Turns to Open	984	984
Weight	27,767 lbs.	29,620 lbs.

AMERICAN FLOW CONTROL

THE RIGHT WAY

AMERICAN Flow Control
P.O. Box 2727
Birmingham, Al. 35202-2727
Phone: 800-326-8051
Fax: 800-610-3569
Email: afcsales@american-usa.com

Waterous Company
125 Hardman Avenue South
South St. Paul, Mn. 55075-1191
Phone: 888-266-3686
Fax: 800-601-2809
Email: afcsales@american-usa.com

WWW.AMERICAN-USA.COM

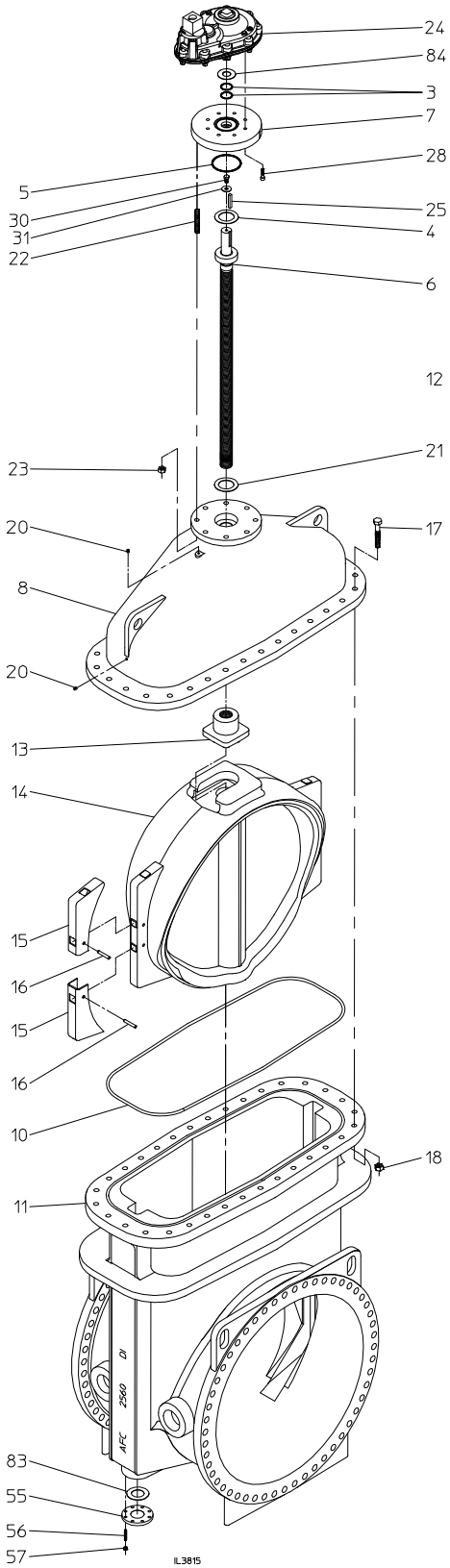

Ref. No.	Description	Material
3	O-Ring	Rubber
4	Upper Thrust Washer	Delrin
5	Stuffing Box Gasket	Rubber O-Ring
6	O-Ring	Rubber
7	Stuffing Box	Ductile Iron ASTM A536
8	Bonnet	Ductile Iron ASTM A536
10	Throat Flange Gasket	Rubber
11	Valve Body	Ductile Iron ASTM A536
12	Stem	316 Stainless Steel
13	Wedge Nut	Red Brass, ASTM B62, UNS C83600
14	Resilient Wedge	EPDM Rubber Encapsulated Ductile Iron ASTM A536
15	Wedge Cover	Acetal Polymer
16	Wedge Cover Pin	Acetal Polymer
17	Hex Head Bolt	304 Stainless Steel
18	Hex Nut	304 Stainless Steel
20	Pipe Plug	Stainless Steel
21	Lower Thrust Washer	Delrin
22	Stud	304 Stainless Steel
23	Hex Nut	304 Stainless Steel
24	Spur Gear Actuator Assembly	AFC Gearing (8:1)
25	Key	Hardened Steel
28	Socket Head Capscrew	0304 Stainless Steel
30	Hex Head Bolt	Zinc Plated Steel
31	Washer	Steel
55	Blind Flange	Ductile Iron ASTM A536
56	Stud	304 Stainless Steel
57	Hex Nut	304 Stainless Steel
58	Blind Flange Gasket	Rubber
83	Blind Flange Gasket	Rubber
84	Actuator Gasket	Rubber

OPTIONAL MATERIALS ARE AS FOLLOWS

BOLTS and NUTS: 316 Stainless Steel

Open Direction ☐ Left(C.C.W.) ☐ Right(C.W.)

NOTES:

1. Bolt pattern of Class 125 flanged ends for 60 in. is in accordance with ANSI/AWWA C115 (ASME B16.1 Class 125).
   Bolt pattern for 66 in. is in accordance with ANSI/AWWA C207 Class E.
2. Valve coated internally and externally with liquid epoxy and meets requirements of ANSI/AWWA C550.
3. Certified to NSF/ANSI/CAN 61 & NSF/ANSI 372.
4. Meets requirements of AWWA C515 with rated working pressure of 250 psig.
5. Gearing provided will be AFC as shown in Material.

AMERICAN FLOW CONTROL
THE RIGHT WAY

AMERICAN Flow Control
P.O. Box 2727
Birmingham, Al. 35202-2727
Phone: 800-326-8051
Fax: 800-610-3569
Email: afcsales@american-usa.com

Waterous Company
125 Hardman Avenue South
South St. Paul, Mn. 55075-1191
Phone: 888-266-3686
Fax: 800-601-2809
Email: afcsales@american-usa.com

WWW.AMERICAN-USA.COM